USER MANUAL AUGUST 2016

ANALOG TO DIGITAL CONVERTER BOARD

MM112

This breakout board hosts the MCP3221 analog / digital converter by Microchip. The chip used here allows the A / D voltage conversion of the input signal applied with a 12-bit resolution (4096 values so). The conversion result is a function of the power supply voltage, in the sense that the precision and consequently the sampling input signal dynamics depends on the power supply voltage;
This is because the ladder resistance divider which sets the comparators reference voltage is connected to the same power supply voltage that powers the board itself. If the device is powered at 5V, the extension of the dynamic range at the input is the same (I.e. 5,000 mV) so the definition, that is the minimum voltage value corresponding to the smallest sampled signal portion (one bit of the 4096 possible) is obtained by reckoning 5.000 / 4.096, that is Vdd / 4,096. In this board we just used 5V, then the smallest sample corresponds to 1.22 mV and so is the resolution.
The maximum input voltage that can be converted without clipping is also a function of the power supply voltage, meaning that it must be lower than the latter. The A / D converter has an I²C bus type output clocked at 100 kHz (as I²C Standard Mode) and up to 400kHz in fast mode. The maximum sampling rate is 22.3 ksps in I²C Fast mode.
The ADC MCP3221 integrated circuit must be powered with a DC voltage comprised between 2.7 and 5.5 V, which in the circuit is supplied by the 5V line.
The LD1 LED indicates, by switching on, when the circuit is powered and then operating.
The I²C bus SCL and SDA lines are each connected to a pull-up resistor. The device address on the bus is fixed by factory to 101, i.e. A2, A1 and A0 bits (remember that in the I²CBus standard the first four bits are the device code, which is set to 1001 in the MCP3221). Microchip can set, but only for volumes, different codes for various MCP3221 production lots.
The power supply, the analog input signal to be sampled and the I²C bus connections are made available through the connectors on the board side; the same are repeated on a 2.54 mm pitch area ready to host a pin-strip that allows a quick and stable breakout board insertion on the electronic board where you want to add the ADC functions.

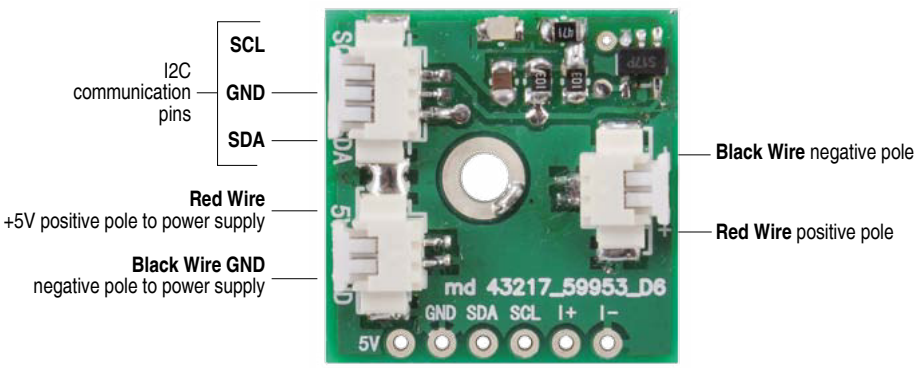

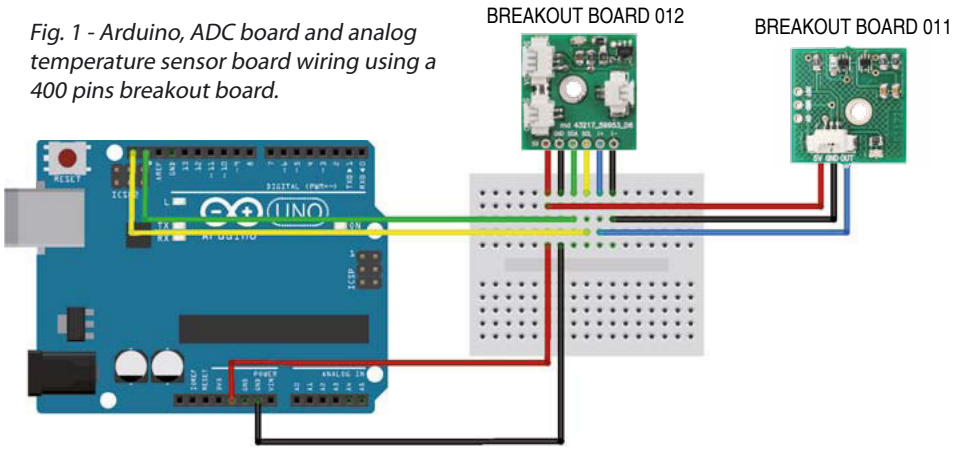

Fig. 1 - Arduino, ADC board and analog temperature sensor board wiring using a 400 pins breakout board.

Using ADC with Arduino

The breakout board proposed here is interfaced with Arduino without needing any specific library, since it uses the Wire library already available in Arduino IDE. The address is the same " Address Bit " which is called in the control byte sent by the I²C bus master during startup of a communication session, which is represented in binary format ("101").

To communicate with the integrated, it must be used the 0x4D I²C command address that allows you to communicate with the module using its predefined address. Fig. 1 shows the Arduino Uno wiring. With such a circuit it is possible to run a sketch in Arduino, in order to acquire the temperature reading made by the LMT84-Q1 sensor with an accuracy greater than that offered by the ADC integrated on Arduino.

You can download the example sketch from the product description on www.futurashop.it.

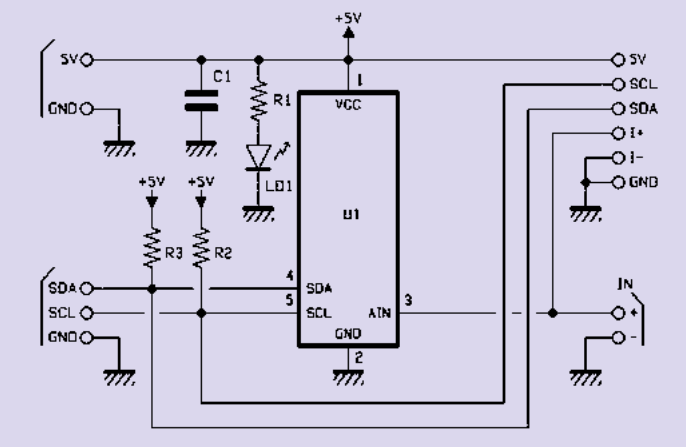

VellemanProjects @Vel_Projects
VELLEMAN nv - Legen Heirweg 33, Gavere (Belgium)
vellemanprojects.com