USER MANUAL

AUGUST 2016

LIGHT SENSOR BOARD
MM109

Based on Vishay's TEMT600 detector, this breakout board is intended for those who need to test or integrate a detection system for the lighting environment. The TEMT6000 is a silicon NPN phototransistor, in a SMD execution, whose contacts' arrangement is consistent with the one adopted by many modern components: no pins, but L-shaped contacts that start from the side and go on under the body.
The phototransistor is sensitive to the light's visible spectrum; the sensitivity is guaranteed within a ± 60° angle, with respect to the perpendicular line to the said surface. When using TEMT6000, one must remember its major features, that (at environmental temperature, typically being 25 °C…) are a maximum Vce (in the absence of light) of 6 volts and a reverse Vce that must not exceed 1.5V, and a maximum collector current of 20 mA. between collector and emitter is less than that, given that the drop on R1 must be subtracted from the 5 volts.

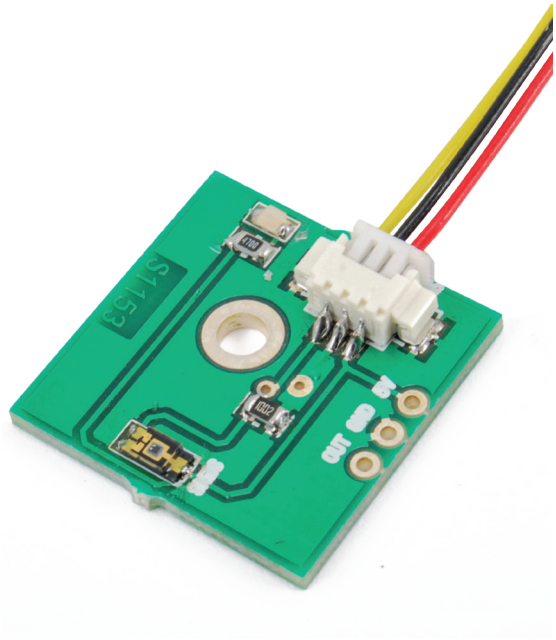

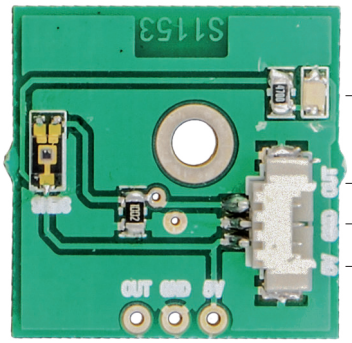

Power supply status LED

Yellow wire sensor's signal output

Black wire GND (negative) power source

Red wire 5V (positive) power source

The Ic collector current never reaches 20 mA, given that, since R1 is a 10 kohm resistor, it will never even reach 0.5 mA.
In low lighting conditions, OUT shows about 0.5 volts, but with a flashlight aimed at the sensor it almost reaches
5 volts.
The LED has been included, so to signal the presence of a 5V power source. In order to offer the utmost versatility, all the lines (power supply, voltage output) are available both as bonding pads on the edges of the printed circuit, and on the pin-strip, so to enable the insertion on other PCBs.
As concerns applications, this breakout board lends itself to acting as an environmental light detector for the automatic control of a commercial building lighting, or as backlight for LCD displays, and even as a sensor needed to create a luxmeter, from which we don't require an extreme accuracy. It may also be useful in order to manage that the vehicle's lights are automatically turned on in a tunnel.

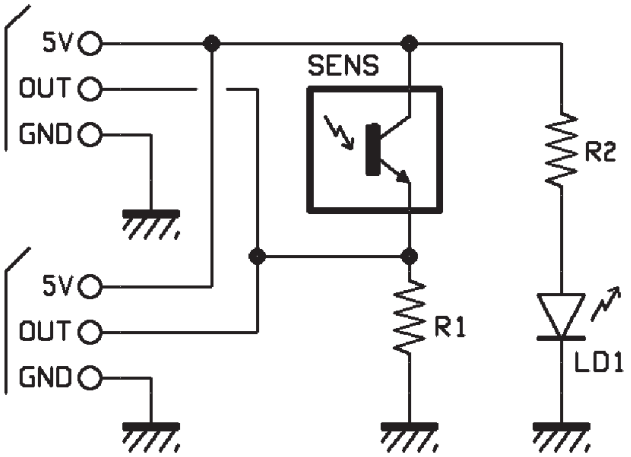

VellemanProjects @Vel_Projects
VELLEMAN nv - Legen Heirweg 33, Gavere (Belgium)
vellemanprojects.com