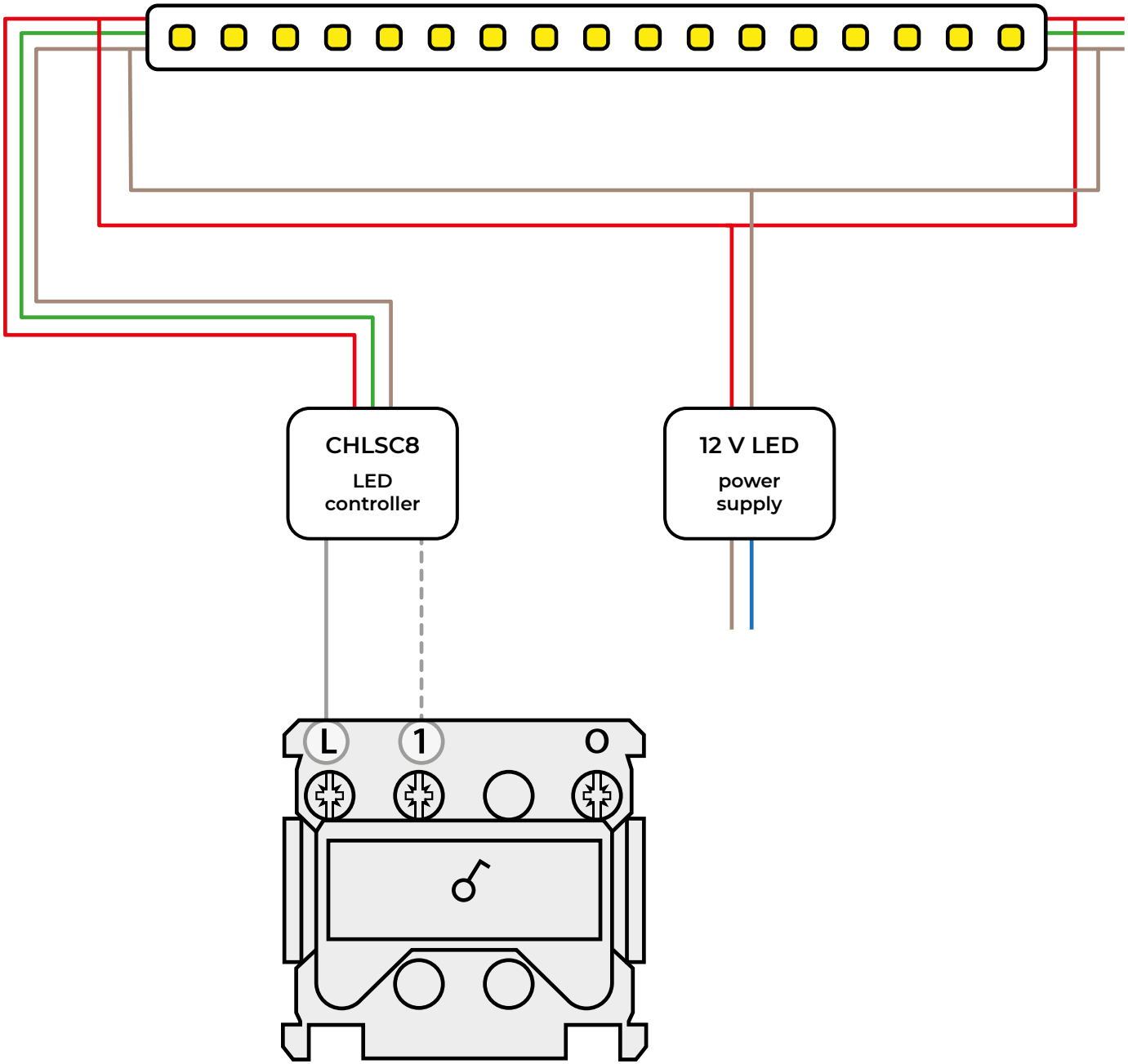
CHLSC8
LED controller
12 V LED
power supply
L
1
O

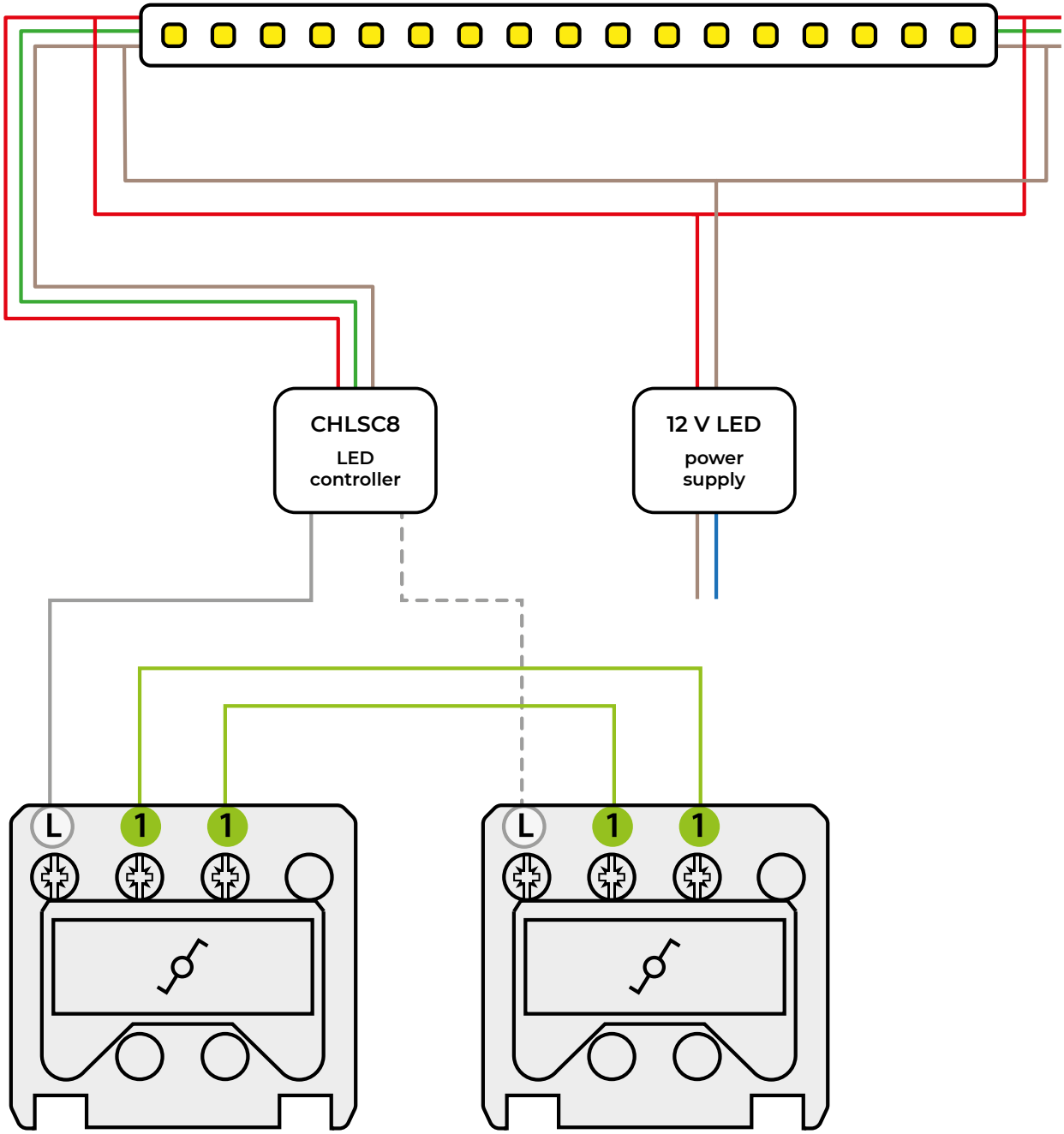
CHLSC8
LED controller
12 V LED
power supply
L
1
1
L
1
1

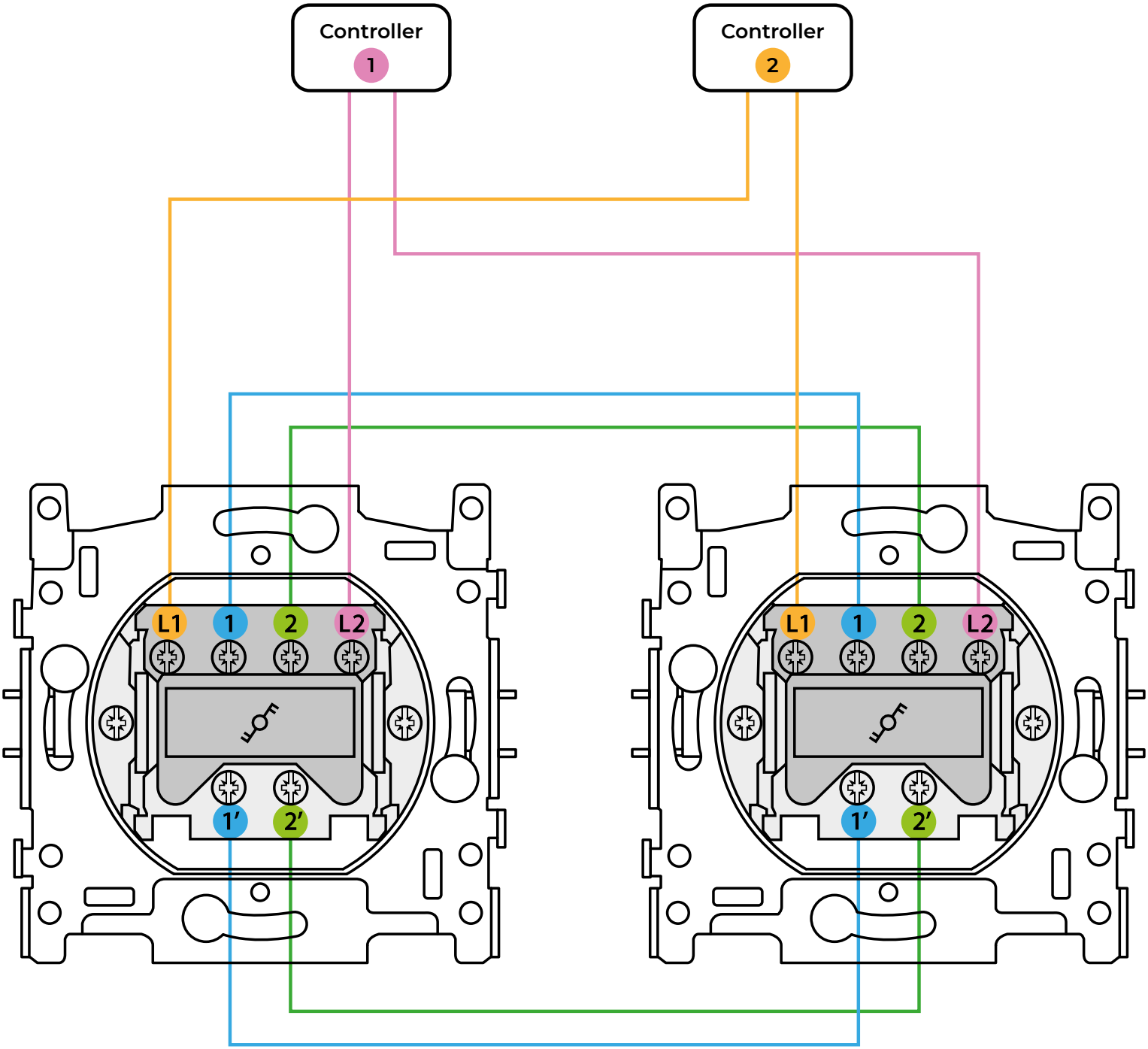
Controller
1
Controller
2
L1
1
2
L2
1'
2'
L1
1
2
L2
1'
2'

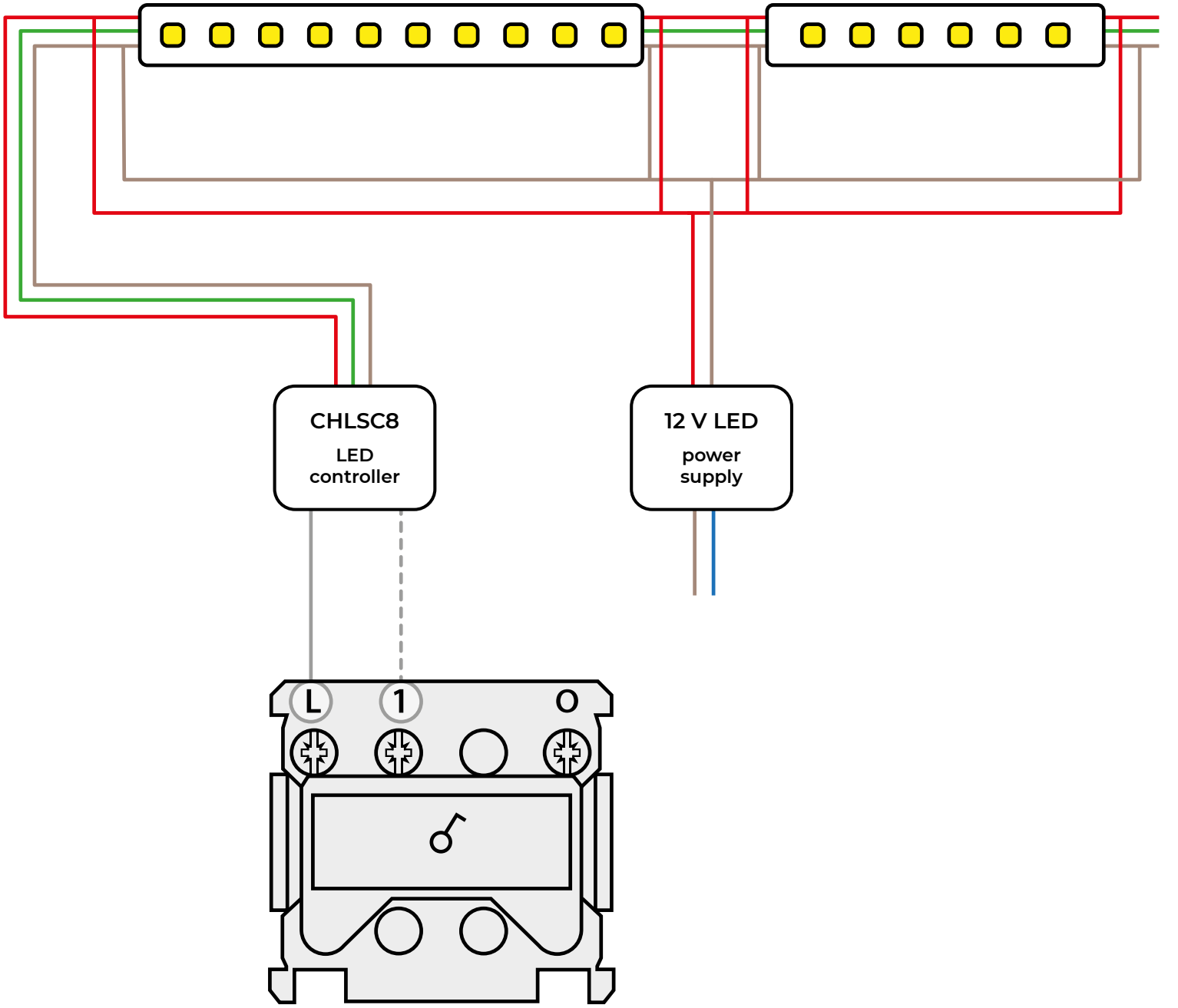
CHLSC8
LED
controller
12 V LED
power
supply
L
1
O

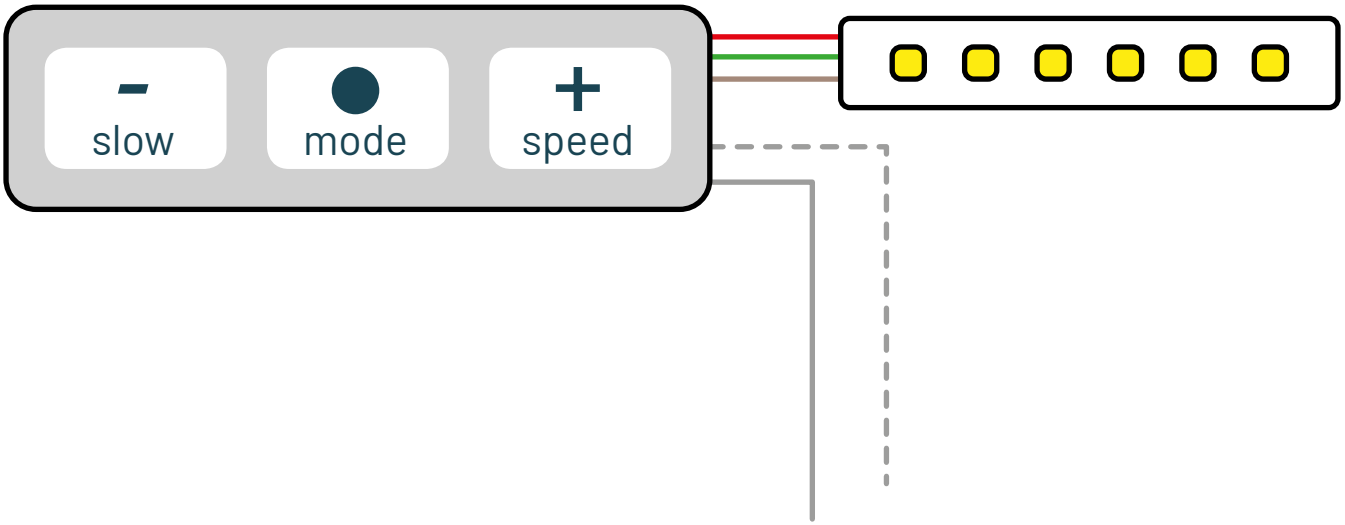
-
slow
mode
+
speed